CAMBRIDGE

Cambridge University Press
978-0-521-80973-3 - The Teacher's Grammar of English: A Course Book and Reference Guide
Ron Cowan
Excerpt
More information

CHAPTER 1

# Introduction

*The Teacher's Grammar of English* is designed for teachers of English to speakers of other languages. In discussions of English language teaching, the distinction is often made between *English as a foreign language* (EFL) and *English as a second language* (ESL). These two terms refer to the environments in which the learning of English takes place. In an EFL environment, the language spoken outside the classroom is not English. In an ESL environment, it is. Generally speaking, the kinds of problems that English language learners[1] have and the grammatical progress they make differ depending on which of these environments they find themselves in. This book is designed for ESL and EFL teachers alike. Moreover, English learners and teachers of subjects other than English may also find this text helpful in answering questions about how the English language works.

There is a long tradition of writing so-called prescriptive English grammar books aimed at teaching students how to write in a certain style. These books, often called writer's guides, are intended for native speakers of English, usually first-year university students, and they contain rules, or guidelines, for writing "good sentences." These rules might include the following: *Remove words and phrases that add nothing to the meaning of your sentence. Avoid ending a sentence with a preposition. Use active instead of passive sentences. The Teacher's Grammar of English* does not teach these kinds of prescriptive guidelines. Instead, it describes the different rules that produce grammatical sentences in English, the kinds of problems nonnative speakers have learning these rules, and the ways that teachers can help these students learn and use these rules in speaking and writing.

This opening chapter explains why a good understanding of English grammar is necessary for being an effective ESL/EFL teacher. It defines the concept of grammar and demonstrates what grammatical rules are. Next, it discusses sociolinguistic factors and information structuring that affect the use of English grammar and explains why teachers need to be aware of these principles. Finally, this introduction lays out the organization of the chapters in the rest of the book and shows how to get the most out of those chapters.

## WHY DO TEACHERS OF ENGLISH HAVE TO KNOW GRAMMAR?

Both native and nonnative speakers of English teach English to speakers of other languages. Those teachers who are nonnative speakers of English typically realize the



© Cambridge University Press www.cambridge.org

CAMBRIDGE

Cambridge University Press
978-0-521-80973-3 - The Teacher's Grammar of English: A Course Book and Reference Guide
Ron Cowan
Excerpt
More information



benefits of knowing English grammar well. However, teachers who are native speakers often wonder why they have to know a lot about English grammar to teach English. After all, they speak the language fluently. Can't they just go ahead and teach what they speak? The answer is no. If you speak a language, you do not automatically know how it works; that is, you do not necessarily have a *conscious* knowledge of the grammatical rules of the language. You are certainly able to use the rules of your first language because you have a *subconscious* (or *tacit*) knowledge of them, which you acquired as a child by listening to adults speak to you and to each other. This tacit knowledge allows you to produce brand-new grammatical sentences that you have never said or heard before. It also enables you to identify a sentence as ungrammatical and to recognize ambiguous sentences as having more than one possible meaning. However, this does not mean that you are able to explain why a sentence is ungrammatical or why a sentence may have more than one meaning. In short, your tacit, native-speaker knowledge of grammar does not enable you to describe or to teach the rules of grammar to a language learner. For that, you must know the rules consciously.

English language learners want to know how grammar in English works. To them, it is the key to understanding the language and using it to communicate. But even native speakers of English who have gone through a teacher training course may not be able to answer learners' questions such as, "Why can't you change that sentence into a passive sentence?" or "Why can't you say 'He let me to do it'?" If a teacher doesn't know the rules of grammar, the only available answer may be, "Because that's the way it is in English." However, this answer is not especially helpful to students who are looking for accurate, detailed information about English grammar. It simply establishes the teacher as a person who may speak the language correctly but is not equipped to tell students what they want to know about it.

As a teacher, you will likely be asked more questions about grammar than any other aspect of English. Even some of your fellow teachers who lack confidence about their knowledge of English grammar may ask you about points that they are not sure of. For this reason, having an accurate, comprehensive understanding of English grammar will make you feel more confident as a teacher and will also help you garner the respect of your colleagues and students.

You might ask, "But isn't the grammar going to be explained in the students' textbook?" Well, yes; unfortunately, however, some English language teaching textbooks contain misleading, oversimplified, and occasionally inaccurate descriptions of particular grammar teaching points. One of the goals of this book is to equip you to recognize misleading or incorrect grammar descriptions. If you see a faulty explanation in a textbook, you will be able to explain the grammar point more accurately and help your students better understand it. A good knowledge of English grammar will also enable you to evaluate a new textbook. As you examine individual lessons and the way the material in it relates to what has been covered in earlier lessons, you will be better equipped to judge how well the textbook is organized and how comprehensive the coverage of individual grammatical topics is. Some books omit important aspects of grammar that need to be covered, and you can supply this missing information and even prepare lessons that are more effective than those in your textbook. You will also find that a clear understanding of English grammar is a valuable aid in designing a syllabus that meets your students' needs and an important asset in preparing your students for national and international English proficiency tests, such as the TOEFL.

© Cambridge University Press www.cambridge.org

CAMBRIDGE

Cambridge University Press
978-0-521-80973-3 - The Teacher's Grammar of English: A Course Book and Reference Guide
Ron Cowan
Excerpt
More information



A final reason why teachers of English to speakers of other languages should know grammar is because it is one aspect of adult language learning on which instruction can have a lasting effect. For many years, it was thought that students who began learning a second language after the onset of puberty could never learn to speak it as well as native speakers. Neurological evidence was cited as proof of this.[2] However, recent research indicates that native-speaker ability in grammar can be acquired by people who start learning in their late 20s, and that learners in their 30s can attain a high level of grammatical proficiency.[3] This suggests that, as a teacher, you can make a difference in your students' ability to speak and write grammatical English, even if they are no longer at the age where they "pick up" English naturally. Additional support for the value of grammar instruction can be found in numerous studies that show that it helps students increase their grammatical accuracy (see Chapter 3). Although researchers are not all of the opinion that language courses should be organized around an explicit grammar syllabus, they do tend to agree that attention to grammatical form in a general way is beneficial.

## WHAT IS GRAMMAR?

Grammar is the set of rules that describes how words and groups of words can be arranged to form sentences in a particular language. This is the definition of grammar that is perhaps most useful for teachers, and it is the definition that will be used in this book. The grammar of English consists of all the rules that govern the formation of English sentences, and this is precisely what learners of English want to know. In fact, many students will demand that a teacher tell them "what the rule is" even if that teacher has been trained to encourage students to figure out what the rule is on their own.

Understanding how grammar rules work and how the elements in a sentence relate to each other can sometimes be facilitated through the use of diagrams. One kind of diagram that can be found in linguistics textbooks as well as in some grammar textbooks for teachers is called a *phrase structure diagram* (or *phrase structure tree*)[4], illustrated in (1). It shows the linear and hierarchical relationship between the various parts of the sentence *Many students use the Internet.*

*Phrase Structure Diagram*

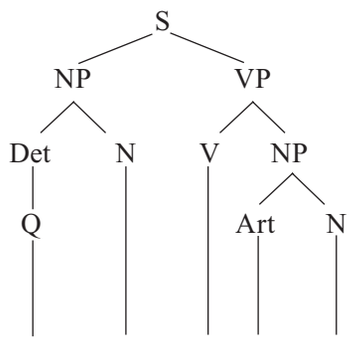


(**1**) Many students use the Internet.

© Cambridge University Press www.cambridge.org

CAMBRIDGE

Cambridge University Press
978-0-521-80973-3 - The Teacher's Grammar of English: A Course Book and Reference Guide
Ron Cowan
Excerpt
More information



This diagram uses various symbols to represent the larger grammatical groupings in the sentence: S means *sentence*, VP means *verb phrase*, NP means *noun phrase*, and Det means *determiner.* The individual words in (1) are labeled V for *verb*, N for *noun*, Q for *quantifier,* and Art for *article.* (Each of these terms is defined in Chapter 2.) The branches link the higher order elements to the words that make up the sentence.

The phrase structure diagram is just one of many ways to represent the relationships between the various grammatical elements in a sentence, and it can often be complicated to follow. Therefore, this book does not contain phrase structure diagrams, but instead uses a combination of prose descriptions and a simple bracketing system that identifies important words and word groupings within sentences. These brackets are used in the following section and throughout the book wherever necessary.

## GRAMMAR RULES IN ENGLISH

Many of the grammar rules discussed in this book move words or groups of words around to create different sentence patterns. They also delete certain words. One example of a grammar rule is *dative movement*, which changes the position of the indirect object, the dative, in a sentence. When applied, as in (2), which has a direct object (DO) after the verb and an indirect object (IO) after the preposition *to*, the rule creates the new sentence pattern shown in (3), in which the positions of the DO and the IO are reversed.

*DO* *IO*
(**2**) Alan sent [a long e-mail message] to [Susan].

*IO* *DO*
(**3**) Alan sent [Susan] [a long e-mail message].

The dative movement rule does two things as shown in (4): it moves the indirect object to a position before the direct object, and it simultaneously deletes the preposition *to*.

(**4**) Alan sent Susan a long e-mail message ~~to~~ _____.

The dative movement rule is simply a way of stating a relationship between two linear orders or patterns of words that can occur in English. This rule applies only to sentences with verbs such as *send*, *throw*, *give*, and *lend*, and not to sentences with verbs such as *correct*, *mention*, and *report*. (The differences between these two sets of verbs are discussed in Chapter 15.) For now, suffice it to say that the second set of verbs cannot be followed by the IO + DO pattern shown in (3). For instance, if we apply the dative movement rule to (5), with the verb *report*, it will produce the ungrammatical sentence in (6), which is marked with an asterisk. (Throughout this book, an asterisk in front of a sentence indicates that the sentence is ungrammatical.)

*DO* *IO*
(**5**) They reported [the accident] to [the police].

*IO* *DO*
(**6**) *They reported [the police] [the accident].

© Cambridge University Press www.cambridge.org

CAMBRIDGE

Cambridge University Press
978-0-521-80973-3 - The Teacher's Grammar of English: A Course Book and Reference Guide
Ron Cowan
Excerpt
More information



The grammatical error in (6) is one that some English learners make, and it illustrates an important point about grammar rules: certain restrictions are often required to insure that a rule does not produce ungrammatical results. (The dative movement rule and its constraints are considered further in Chapter 15.)

## FACTORS AFFECTING GRAMMATICAL CHOICES

Speakers who have successfully internalized the rules of a language and their constraints are said to possess *grammatical competence*. This means that they are able to use the rules of the language automatically to produce grammatical sentences. It also means that they are able to make accurate judgments regarding the grammaticality of the sentences they hear and read. For instance, if you have native-speaker grammatical competence in English, you will be able to identify (6) as clearly ungrammatical. You may not be able to explain what makes it ungrammatical, but you will know that something is wrong with it.

Gaining this kind of competence may well be the most important goal in learning a second language. After all, the ability to produce grammatical sentences is vital for effective communication. Nevertheless, the achievement of grammatical competence does not guarantee that a language learner will be able to communicate effectively and appropriately in every context. This is because several other factors, besides grammaticality, influence the choices that speakers and writers need to make about which grammatical form or structure to use in a given situation. It is important for teachers of English to understand these factors so that they can help their students know when and where it is most appropriate to use the grammatical forms and structures they are learning.

### Sociolinguistic Factors

*Sociolinguistic factors* refer to things like the setting in which a language is used and who the speaker and the interlocutor are. The location, the relationship between the participants, and the medium of communication (e.g., spoken or written language) can affect the choice of grammatical forms and lexical items (*vocabulary*). Different *registers* (i.e., styles of English) are used depending on the setting in which the speaker or writer is attempting to communicate. For example, consider (7), taken from the weekly column of movie critic Roger Ebert. The sentence is a quote from a personal letter received by Ebert.

(7) Jon was very chuffed to hear that you'd picked up on this.[5]

The writer uses a conversational style of English that contains a contraction, *you'd*, for *you had*, and the adjective *chuffed*, a British English slang term meaning "excited" or "pleased." He also uses the idiomatic[6] three-word verb *picked up on*, which means "noticed." This three-word verb is characteristic of conversation, but it will be understood by a much wider audience of native speakers than the slang lexical item *chuffed*. The use of these three grammatical devices – a contraction, an idiomatic three-word verb, and a slang adjective that will be understood by a limited audience – indicates that the social context for which the communication was written is informal, familiar, and personal.

© Cambridge University Press www.cambridge.org

CAMBRIDGE

Cambridge University Press
978-0-521-80973-3 - The Teacher's Grammar of English: A Course Book and Reference Guide
Ron Cowan
Excerpt
More information



Another writer might choose to remove the conversational tone from the sentence by replacing the contracted form *you'd* with *you had*, the idiomatic *chuffed* with *pleased* or *excited*, and *picked up on* with *noticed*, as shown in (8).

(**8**) Jon was very pleased to hear that you had noticed this.

These changes, especially the removal of the idiomatic *chuffed*, shift the sentence up to a register characteristic of a personal, but more formal, letter, and it can now be understood by more readers. It is possible to make further changes that transform (8) to a slightly more formal register, which is shown in (9). By using the last name of the person who was very pleased, Jon Reynolds, replacing *this* with a direct reference to what was "picked up on," and changing *you* to *your reader*, we get a sentence that might appear in a typical newspaper article or a business letter.

(**9**) Mr. Reynolds was very pleased that your reader had noticed this concealed reference to Mike Royko's fictional character.

Sentence (9) can be shifted to a yet more formal register that approximates the style found in academic prose by changing *your reader* to the more impersonal *the reader* and changing the complement in the sentence (the section following *that*) into the passive voice, as shown in (10).

(**10**) Mr. Reynolds was very pleased that this concealed reference to Mike Royko's fictional character had been noticed by the reader.

An even more impersonal tone can be achieved by deleting the reference to the reader, as in (11).

(**11**) Mr. Reynolds was very pleased that this concealed reference to Mike Royko's fictional character had been noticed.

So we see that by using alternative grammatical forms and lexical items, we can shift the tone from highly informal conversational English to more formal registers. Why is some understanding of the different registers of English important for teachers of English? The reason is that teachers will have to give their students a sense of the circumstances in which certain grammatical constructions are appropriate. If we teach contracted forms of modal verbs (e.g., *I hafta see him* vs. *I have to see him*) or alternative question forms (e.g., *Are you gonna do that?* vs. *Do you intend to do that?*), we must also convey when one or the other form is more appropriately deployed.

One register distinction that is of special concern to teachers of English is the difference between grammar used in conversation and grammar used in written English. It is important for language learners to develop a sense of when a particular sentence structure is appropriate for use in conversation but not appropriate in writing. And it is nearly as important for learners to develop a sense of which sentence structures are favored, for example, in academic articles and which might be better employed in newspaper editorials. Questions concerning the use of specific English grammatical structures in different writing genres can be answered with greater precision today than in the past, due to the appearance of books like the *Longman Grammar of Spoken and Written English* (*LGSWE*) (Biber et al., 1999), which describe the frequency with which different grammatical constructions occur in various registers and genres. The findings in the *LGSWE* are based on data taken from a corpus of over 40 million words representing British and American spoken and written English. The statements

© Cambridge University Press www.cambridge.org

CAMBRIDGE

Cambridge University Press
978-0-521-80973-3 - The Teacher's Grammar of English: A Course Book and Reference Guide
Ron Cowan
Excerpt
More information



made in the chapters that follow regarding how frequently grammatical forms and structures occur in English, and in which registers and genres they most commonly occur, are based on the *LGSWE* corpus. References to pages in the *LGSWE* where a more detailed discussion may be found are included in the Endnotes.

The written/spoken dimension plays a part in English language pedagogy. When students have attained a high-intermediate or low-advanced level of proficiency in many programs, there is usually a greater emphasis on writing skills. And in programs that are preparing students for university coursework, teachers want to know which grammar structures are more prevalent in academic writing so they can emphasize these in their writing instruction. Here the written dimension of English requires further refinement into *academic English* vs. *nonacademic English*. Questions of priority (i.e., which grammar points should be emphasized in an ESL/EFL syllabus because of their high frequency) can be partially answered by corpus data.

## Information-Structuring Principles

In this book, we will also look at certain principles that native speakers follow that allow them to interpret and produce sentences that are appropriate within the context of a larger discourse. An example of one of these *information-structuring principles* is the *given–new contract*, which states that in each new sentence that a native speaker of English says or writes, *given* (previously mentioned) information should appear before *new* information (information that has not been mentioned previously). This principle can affect a native speaker's choice of grammatical patterns. For example, earlier we saw that, because of the rule of dative movement, we have two possible patterns, shown in (2) and (3). These two patterns are also shown in (12) and (13), in which the indirect object (IO) for each is the pronoun, *him*.

*DO* *IO*
(**12**) Give [a CD] to [him].

*IO* *DO*
(**13**) Give [him] a [CD].

Most English language teaching textbooks teach or imply that there is no reason to choose one of the above patterns over the other since they are interchangeable in all contexts. However, this is not true. Native speakers will choose one of these two patterns, depending on the previous discourse. If the indirect object is mentioned in a previous sentence, the speaker will choose the pattern in (13), because this puts the given information before the new information contained in the direct object.

In (14), Susan mentions John in the first sentence, so this makes him old information. Pronouns always mark previously mentioned information, so Ann's response would have to be (a), where the IO pronoun *him* comes before the new information, a CD. Response (b) puts the old information in the position of new information, so it will not be chosen. This fact has been demonstrated in large-scale experiments with native speakers.[7]

(**14**) Susan: You know, I can't figure out what to get John for his birthday. Any ideas?

(**15**) Ann: a. Give him a CD. You know how much he likes music.
b. Give a CD to him. You know how much he likes music.

© Cambridge University Press www.cambridge.org

CAMBRIDGE

Cambridge University Press
978-0-521-80973-3 - The Teacher's Grammar of English: A Course Book and Reference Guide
Ron Cowan
Excerpt
More information



Notice that the given–new contract does not affect the grammatical correctness of the sentences. It is rather a principle that affects our choice of grammatical structures. It is not absolute; rather, it strongly biases a native speaker's decision when more than one syntactic pattern is possible. Both (a) and (b) in (15) are grammatical, but native speakers would invariably choose to continue the discourse with alternative (a), because this sentence conforms to the given–new contract. The pedagogical implication for teaching English is that learners should be exposed to the given–new contract so that they can assimilate it and use it. In this book, we examine other information-structuring principles like the given–new contract and show how they may be relevant to English language pedagogy.

## Language Change and Usage

The grammar of a language changes over time. The changes, which often stretch over hundreds of years, are rarely noticed by anyone except linguists; however, some changes can be more generally noticed, and therefore can have consequences for teachers. In this book, we look at some cases of ongoing change that should be addressed by teachers. One of these affects the grammar of conditional sentences such as the one shown in (16).

(**16**) *****If *I would have seen* her, I would have said hello.

This kind of sentence, which is often referred to as a *counterfactual conditional* because the proposition in the *if*-clause did not happen (i.e., I didn't see her), requires the past perfect tense in the *if*-clause. Thus, strictly speaking, the grammatical version of (16) is (17) with the past perfect form, *had seen*, in the *if* clause.

(**17**) If I *had seen* her, I would have said hello.

However, the version in (16) is becoming more common in spoken American English. You can hear counterfactual conditionals with *would have* in both clauses more and more frequently on television talk shows, often uttered by literate, educated native speakers. The change to *would have* in the *if*-clause is particularly noticeable when the main verb in that clause is *have*. The past perfect tense with the main verb *have* is *had had*, as shown in (18).

(**18**) If I *had had* more time, I would have visited that old church.

But many native speakers cannot believe that (18) is grammatical and insist instead that (19) is the only grammatical possibility.

(**19**) *****If I *would have had* more time, I would have visited that old church.

The widespread use of *would have* in both clauses of counterfactual conditionals in spoken English is held at bay in written English by editors and teachers wielding blue pencils. It will be interesting to see, however, if this change, which appears to have started in spoken English, will be halted. This kind of ongoing change, where some speakers adhere to the rule embodied in (17) and (18) while an increasing number of other speakers start to use the variation in (16) and (19), presents an interesting challenge to teachers of English, since their students will probably notice the difference and ask if the latter two sentences are grammatical. Even if they do not ask, the teacher or textbook writer should point out the variation and provide students with some guidelines for how to deal with these competing structures when speaking and writing English.

© Cambridge University Press www.cambridge.org

CAMBRIDGE

Cambridge University Press
978-0-521-80973-3 - The Teacher's Grammar of English: A Course Book and Reference Guide
Ron Cowan
Excerpt
More information



## THE ORGANIZATION OF THIS BOOK

Beginning with Chapter 4, each chapter in this book is organized into three major sections. The first section covers the facts about the grammar topic treated in that chapter that one needs to know to be an informed teacher of English. In addition to the grammatical rules, issues relating to meaning and usage (including sociolinguistic factors and information-structuring principles) are treated in this section. For the sake of clarity, invented example sentences are often used to illustrate how specific grammatical rules work. However, you will also find many authentic example sentences that come from newspaper articles and other sources, all of which are referenced in the Endnotes. Sometimes included are facts that are important for the teacher to know in order to answer students' or colleagues' questions but that may not be directly applicable to teaching the grammar topic. These extra pieces of information are found in Additional Facts. Instructors who have a limited amount of time to cover a great deal of material may wish to omit this.

The second major section of each chapter, Problems That ESL/EFL Students Have With . . . , describes recorded grammatical errors that English language learners with different native languages (L1s) typically make when trying to produce sentences that embody the grammar topic. The probable causes of the errors and reasons for their persistence are also discussed. Almost all of these errors are documented in research studies in the area of Second Language Acquisition (SLA) or in corpora of written errors.[8] The specific study or corpus from which an error was taken can be found in the Endnotes and References at the end of each chapter. Some of the errors discussed in these sections have been shown to be highly persistent, occurring in the speech and writing of learners who are about to or have already begun using English as professionals and will receive no more English language instruction. These highly persistent errors are typical of *end-state* or *stabilized grammars* (see Chapter 3), and teachers may wish to take pedagogical action to raise students' awareness of them. The errors that are most likely to have this kind of persistence are indicated, and possible strategies for reducing or eliminating them from the grammar of English language learners are offered.

The third major section of each chapter, Suggestions for Teaching . . . , includes activities for teaching the grammar topic covered in the chapter. This section is divided into two subsections, the first (and shorter) of which indicates the particular points that should be emphasized and describes conventional approaches to teaching them. Potential shortcomings of these approaches may also be mentioned. The second subsection suggests activities that call on students to employ the grammar structures within the context of meaningful communication. An effort has been made to provide a broad range of activities and tasks for use in a variety of settings.

## TO THE STUDENT

Throughout the first section of each chapter you will find summary tables that condense the main points that you should understand and retain. Use these to review the section you have just read. The summary tables are not intended to be a substitute for the material in the text. Go back and reread the material on any point in the summary

© Cambridge University Press www.cambridge.org

CAMBRIDGE

Cambridge University Press
978-0-521-80973-3 - The Teacher's Grammar of English: A Course Book and Reference Guide
Ron Cowan
Excerpt
More information



table that you do not feel confident about. After you have done this, go through the exercises that come after the summary table and answer the questions. These are intended to help you determine whether you have mastered the material.

## ENDNOTES

[1] While it is quite common to refer to students in ESL/EFL environments as ESL/EFL students, the terms *English language learner* (ELL) and *English learner* (EL) are also used.

[2] See Lenneberg (1967), Curtiss (1977), Johnson and Newport (1989).

[3] See Bialystock and Hakuta (1994) and Birdsong (1992). The most telling piece of evidence that second-language learning may not be limited by a "critical period" comes from Birdsong and Molis's (2001) precise replication of Johnson and Newport's (1989) study with subjects who were native speakers of Spanish. Their results show near-native-like performance by second-language learners in their mid-20s and a few cases of very high performance by learners in their 30s. This evidence also supports the idea that the similarity of a learner's native language to the language being learned (Spanish grammar is relatively similar to English) is an important factor for success in second-language acquisition.

[4] Two widely used textbooks that use phrase structure trees are Morenberg's (2002) *Doing Grammar*, which is designed for use with American college students (native speakers of English) and Celce-Murcia and Larsen-Freeman's (1999) *The Grammar Book*, which is written for ESL/EFL teachers.

[5] *The Answer Man*, F3 News-Gazette, December 29, 2002.

[6] An idiom is a grammatical construction, made up of a fixed group of words, which has its own unique meaning.

[7] For examples, see Haviland and Clark (1974) and Cowan (1995).

[8] Many grammatical errors discussed in this book will be documented from two learner corpora assembled from the compositions of ESL students. One corpus was produced from the written compositions of Korean students. It comprises 241,656 words and includes essays from (1) students in an intensive English program, which prepares them to enter American universities, and undergraduate students in an American university (72,145 words), and (2) graduate students in an American university (169,511 words). There are at least three distinct proficiency levels in this Korean learner corpus. The other corpus was produced by Spanish-speaking ESL students. It has the same proficiency levels as the Korean corpus but comprises only slightly more than 36,000 words.

## REFERENCES

Bialystock, E., & Hakuta, K. (1994). *In other words: The science and psychology of second-language acquisition*. New York: Basic Books.

Biber, D., Johansson, S., Leech, G., Conrad, S., & Finegan, E. (1999). *Longman grammar of spoken and written English*. Essex, England: Pearson Education Limited.

Birdsong, D. (1992). Ultimate attainment in second language acquisition. *Language, 68*, 706–755.

Birdsong, D., & Molis, M. (2001). On the evidence for maturational constraints in second-language acquisition. *Journal of Memory and Language, 44*, 235–249.

Celce-Murcia, M., & Larsen-Freeman, D. (1999). *The grammar book: An ESL/EFL teacher's course*, 2nd ed. Boston: Heinle & Heinle.

© Cambridge University Press www.cambridge.org